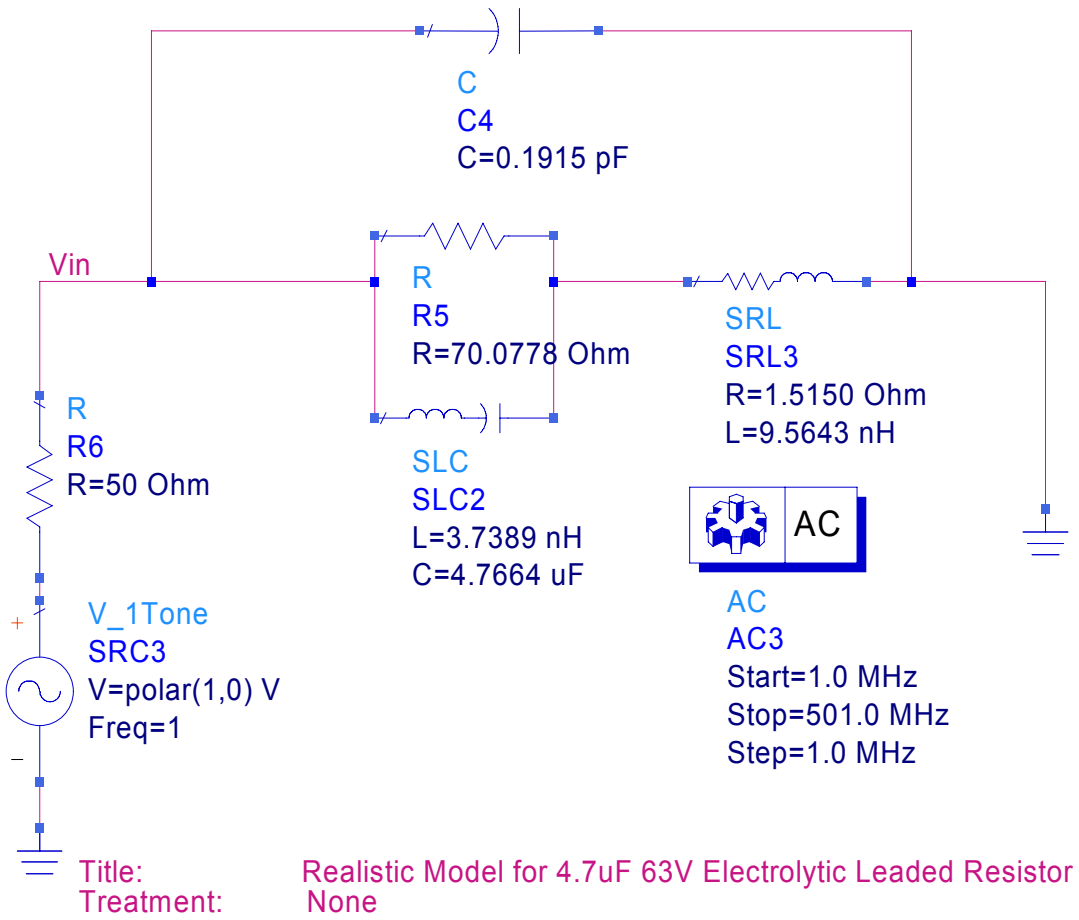
C
C4
C=0.1915 pF
Vin
R
R5
R=70.0778 Ohm
SRL
SRL3
R=1.5150 Ohm
L=9.5643 nH
R
R6
R=50 Ohm
SLC
SLC2
L=3.7389 nH
C=4.7664 uF
AC
AC
AC3
Start=1.0 MHz
Stop=501.0 MHz
Step=1.0 MHz
V_1Tone
SRC3
V=polar(1,0) V
Freq=1
Title: Realistic Model for 4.7uF 63V Electrolytic Leaded Resistor
Treatment: None

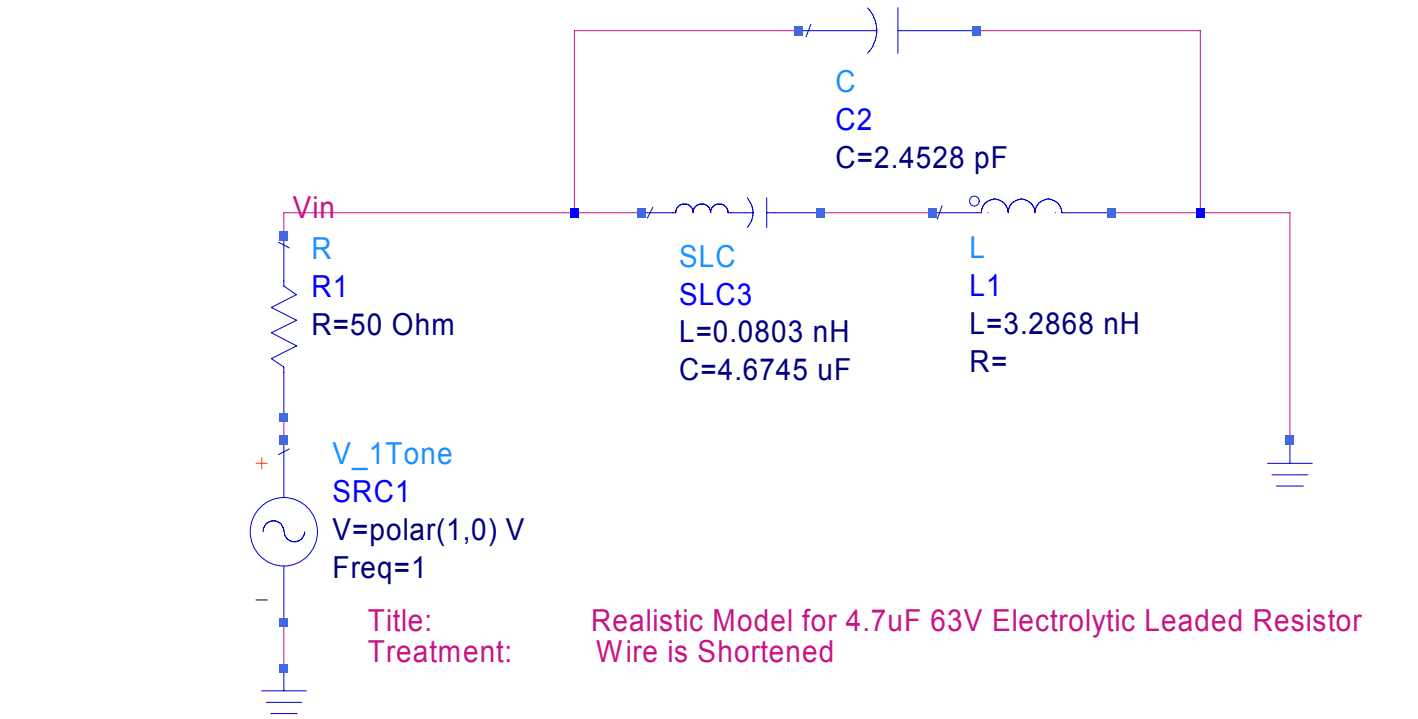
C
C2
C=2.4528 pF
Vin
R
R1
R=50 Ohm
SLC
SLC3
L=0.0803 nH
C=4.6745 uF
L
L1
L=3.2868 nH
R=
V_1Tone
SRC1
V=polar(1,0) V
Freq=1
Title: Realistic Model for 4.7uF 63V Electrolytic Leaded Resistor
Treatment: Wire is Shortened